TECHNICAL
EXHIBITOR MANUAL

42ND CONGRESS OF THE ESCRS

# BARCELONA

## 6-10 SEPTEMBER 2024

Fira de Barcelona, Spain

2024 V8

EA EXHIBITIONS

# UPDATE LOG

Please see below for an overview of all updates to the Technical Exhibitor Manual per version.

| | |
|---|---|
| V2 page 10 | added "Audio-visual & PC equipment - BOOTH" |
| V2 page 10 | added "Audio-visual & PC equipment - SYMPOSIA" |
| V2 page 11 | added "Badge scanners / lead retrieval" |
| V2 page 15 | updated information about catering |
| V3 page 16 | added "Conference Video Coverage" information |
| V4 page 12 | added "Parking" |
| V4 page 21 | updated the information with the Electricity FAQ |
| V4 page 27 | change in pictures |
| V5 page 4 | added information about return of empties during dismantling & strictly night time activities outside the venue |
| V5 page 11 | updated information about badge scanners / lead retrieval |
| V5 page 12 | update information abput shuttle buses pick up & drop off |
| V5 page 14 | link for build-up badges |
| V5 page 17 | costs for self unloading |
| V5 page 17 | link to vehicle entrance procedure |
| V5 page 17 | updated shipping manual from GBH |
| V5 page 21 | updated information about electricity service chests |
| V5 page 28 | updated rigging order forms |
| V5 page 32 | added "Medical gases & lasers" |
| V5 page 33 | added "Product sales" |
| V6 page 35 | updated information about stand approval |
| V6 page 28 | updated information about rigging |
| V7 page 15 | updated information about barista's in catering chapter |
| V7 page 35 | new information about double decker stands in chapter stand approvals |
| V8 page 14 | updated information about contractor badges & wristbands during exhibition days |

# WELCOME

Welcome to the Technical Exhibitor Manual of the ESCRS 2024 Congress which will be held from 6 - 10 September, 2024 in Barcelona, Spain.

EA Exhibitions is appointed as the official Exhibition Contractor by the European Society of Cataract and Refractive Surgeons (ESCRS) and its official PCO, MCI Suisse SA.

The manual can be downloaded in PDF format from downloads, in your dashboard on https://www.toddoo.com/event/escrs42

**PROFESSIONAL CONGRESS ORGANISER [PCO]**
**MCI Suisse SA**
Rue du Pré-Bouvier 9
1242 Satigny
Switzerland
escrs.sponex@mci-group.com

**EXHIBITION CONTRACTOR**
**EA Exhibitions**
Zekeringstraat 36B
1014 BS Amsterdam
The Netherlands
T: +31 20 26 23 272
escrs@eaexhibitions.com

# IMPORTANT INFORMATION

## General

- Rigging needs to be requested before 10 JULY, 2024. Requests received after this date cannot be processed anymore.
- Two weeks before build-up, you receive an email with information how to create your build-up badge.
- A strict time limit to night time activities outside is in effect from 10pm-6am, both during the periods of build-up and breakdown and during the show days, specifically in the side streets of halls 6 and 7.
- The electrical supply will be shut off one hour after the event closes on their final day for safety reasons. For safety and fire protection reasons it is necessary that all devices that consume electricity are switched off at the end of every event day when leaving the stand.
- After the closing of the exhibition on Monday 10, September, aisle carpet will be removed first before returning the empties. This will take approximately one hour.
- The Gran Via venue strictly limits night-time activities outside (between 10 pm and 6 am), both during the periods of the build up and breakdown and during the show days and in determined areas, specifically:
  - In the side streets of halls 6 and 7 (adjacent to C/ Alumini), The rear area of halls 5 and 7 (C/ Mileva Maric),

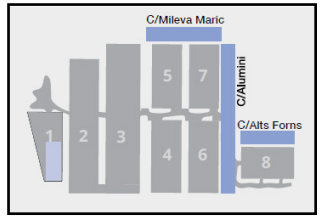


## Space only

- Maximum construction height of the stands in exhibition hall 6 & 7 is:
  - 4 meter for walls
  - 7 meter for rigging (top of rigging).
- The deadline for submitting your stand approval is 3 JULY, 2024.

## On-site

- All empties must be removed from the exhibition on 5 SEPTEMBER, BEFORE 20:00.
- Emergency aisles must be empty during the build-up and breakdown (marked in blue on the floorplan).
- The use of safety shoes and hard hats are advised in all construction areas.

## Orders

- Orders will only be processed after receiving the payment. If we do not receive the payment prior to event, stand items will not be installed when build-up starts.
- Cancellation of orders: 50% refund available until 2 weeks prior to the event and no refunds will be issued after 2 weeks prior to the event.

# CONTENT


## GENERAL INFORMATION

- LOCATION
- FLOORPLAN
- CONTACT LIST
- TIME TABLE
- DEADLINES
- AUDIO-VISUAL & PC EQUIPMENT
- BADGE SCANNERS / LEAD RETRIEVAL
- COMPANY PROFILE & LOGO
- LOCAL CONGRESS PARTNER
- PARKING SHUTTLE BUSES

## EXHIBITOR INFORMATION

- EXHIBITOR BADGES
- BUILD-UP & DISMANTLING
- CATERING
- CONFERENCE VIDEO COVERAGE
- FREIGHT FORWARDING
- HALL INFORMATION
- MEETING ROOMS
- REGISTRATION DESK OPENING HOURS

## EXHIBITOR SERVICES BY EA

- CLEANING & WASTE DISPOSAL
- ELECTRICITY
- HOSTESSES
- STAND SECURITY
- INTERNET & WIFI
- STAND PACKAGES
- CUSTOM STAND DESIGNS
- RIGGING & SUSPENSION WIRES
- WATER

## EXHIBITION REGULATIONS

- COMPANY NETWORKING, MEETINGS & EVENTS
- GIVE AWAYS & PRINTED MATERIAL
- INSURANCE REQUIREMENTS
- LEGAL ISSUES
- MEDICAL GASES/LASERS
- NOISE & LIGHTS
- PARTITION WALLS
- PHOTO AND FILM RECORDING
- PRODUCT SALES

## EXHIBITION REGULATIONS

- PRODUCT DISPLAY
- STAND ACTIVITIES
- SAFETY & FIRE REGULATIONS
- STAND APPROVAL

## GENERAL RULES & REGULATIONS

- EA EXHIBITIONS
- FIRA BARCELONA

# GENERAL INFORMATION

## LOCATION

Fira Gran Via (North Access)
C/ Foc, 3708038
Barcelona, Spain

The exhibition of the ESCRS 2024 will be held in hall 6 & 7.

You can find your way to the congress center via: link
Taxi drop-off and pick-up is located in front of hall 8 (main entrance).

Access for lorries: link

## FLOORPLAN

See up to date exhibition floorplan in Toddoo: https://www.toddoo.com/event/escrs42

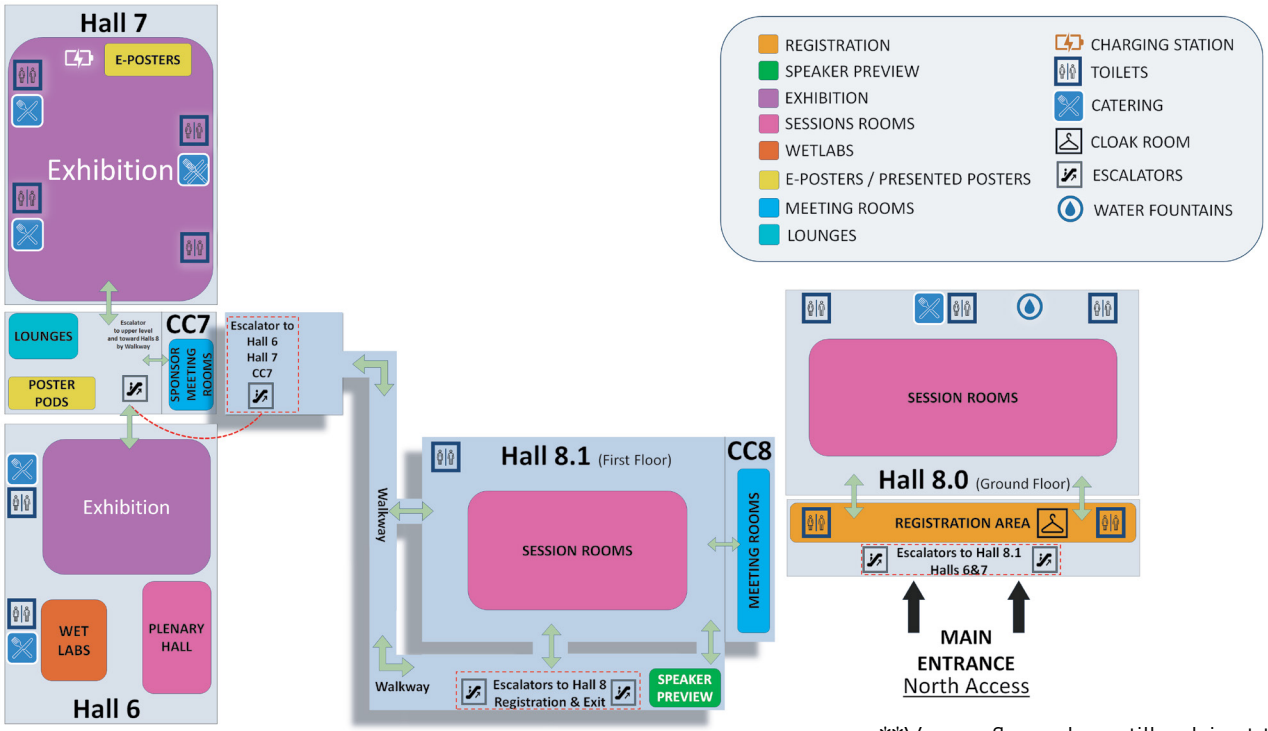


**Venue floorplan still subject to change

# CONTACT LIST

| COMPANY | EMAIL |
|---|---|
| **EA Exhibitions**<br>Exhibitor stands<br>Exhibitor products & services<br>Early build-up | escrs@eaexhibitions.com |
| **MCI Suisse SA**<br>Exhibition & Sponsorship<br>General enquiries<br>Registration<br>Badge scanners<br>Hotels | escrs.sponex@mci-group.com<br>escrs.conf@mci-group.com<br>escrs.reghot@mci-group.com<br>badgereader@wearemci.com<br>escrs.reghot@mci-group.com |
| **GastroFira**<br>Stand & Symposium catering | escrsgastrofira@firabarcelona.com |
| **GBH EXHIBITION FORWARDING LTD**<br>Freight forwarding & handling<br>Lorry parking | escrs@gbhforwarding.com |
| **M-Events**<br>Audio-visual equipment - symposia<br>Stand audioguide equipment (Headsets and "Meet the Experts" Equipment) | industry@m-events.com |
| **Ovation**<br>Local transportation<br>Local restaurants<br>Local guides<br>Social activities & entertainment<br>Photographers | elena.rubio@ovationdmc.com |
| **Media Mice**<br>Conference Video Coverage | sales@mediamice.com |

# TIME TABLE

| BUILD-UP AND DISMANTLING HOURS | DAY | DATE | TIME |
|---|---|---|---|
| Early build-up (advanced booking only) | Tuesday | 3 September 2024 | 08:00 - 22:00 |
| Move - in / construction space only stands | Wednesday<br>Thursday | 4 September 2024<br>5 September 2024 | 08:00 - 22:00<br>08:00 - 20:00* |
| *ALL EMPTIES MUST BE REMOVED FROM THE EXHIBITION BEFORE 20:00! | | | |
| Move-in exhibitors with a stand arranged by EA Exhibitions | Thursday | 5 September 2024 | 08:00 - 20:00* |
| *ALL EMPTIES MUST BE REMOVED FROM THE EXHIBITION BEFORE 20:00! | | | |
| Finalisation on stand only** | Thursday<br>Friday | 5 September 2024<br>6 September 2024 | 20:00 - 22:00<br>08:00 - 11:00 |
| **NO ACTUAL CONSTRUCTION, NO PAINTING, NO SAWING, NO DRILING, NO FLIGHT CASES OR ANYTHING ELSE THAT REQUIRES TOOLS! | | | |
| Dismantling | Monday | 9 September 2024 | 19:00 - 22:00 |
| Dismantling | Tuesday | 10 September 2024 | 08:00 - 22:00 |

| EXHIBITION OFFICIAL OPENING HOURS | DAY | DATE | TIME |
|---|---|---|---|
| Exhibition official opening hours | Friday | 6 September 2024 | 12:00 - 17:00 |
| Exhibition official opening hours | Saturday | 7 September 2024 | 09:00 - 17:00 |
| Exhibition official opening hours | Sunday | 8 September 2024 | 09:00 - 17:00 |
| Exhibition official opening hours | Monday | 9 September 2024 | 09:00 - 17:00 |
| THE EXHIBITION WILL BE ACCESSIBLE FOR EXHIBITORS 60 MINUTES BEFORE AND AFTER THE OFFICIAL EXHIBITION OPENING HOURS. | | | |

| | |
|---|---|
| Updated ESCRS 2024 Congress program | https://congress.escrs.org/programme/programme-overview/ |

# DEADLINES

Submit online your requests and registrations on time by clicking on the links below.

**30 JUNE**
- Company profile

**3 JULY**
- Stand approval

**10 JULY**
- Graphics form
- Hostess form
- Rigging form

**17 JULY**
- Grid form
- Early build-up

**4 AUGUST**
- Late price starts

**18 AUGUST**
- Web shop closed

**20 AUGUST**
- Booth / Symposia Catering deadline

# AUDIO-VISUAL & PC EQUIPMENT - BOOTH

AV and PC equipment can be ordered via the webshop on the exhibitor portal Toddoo.
For any special requests please contact us at escrs@eaexhibitions.com.

## AUDIOGUIDE EQUIPMENT - Headsets

Headsets and “Meet the Experts” Equipment
M-Events is the official provider of headsets and Audioguide Equipment to help you organise talks and “Meet the Experts” sessions on your booth.
Please contact: industry@m-events.com

# AUDIO-VISUAL & PC EQUIPMENT - SYMPOSIA

The official contractor for audio visual equipment for satellite symposia is M-Events. Their brochure and related documents are available HERE.
Order deadline is 31 July, 2024.
Contact: industry@m-events.com

## BADGE SCANNERS / LEAD RETRIEVAL

Maximize your impact at ESCRS 2024 with next-level lead-retrieval solutions. CLICK HERE for more information.
As a reminder, symposium scanners are no longer included in sponsorship packages. These tools are available for separate purchase, along with exhibition booth scanning options which you can book directly HERE to enhance your experience and outreach.

If any questions, please contact Karen Bhavnani at badgereader@wearemci.com

## COMPANY PROFILE & LOGO

To appear as a confirmed sponsor/exhibitor on the ESCRS 2024 website, congress app and printed pocket programme, make sure to complete this form by 30 JUNE, 2024. Past this date, the PCO can not guarantee that it will appear in the congress app. Processing a submission may take up to 5 working days.

## LOCAL CONGRESS PARTNER

Ovation Spain has been selected for on-site ground services. Their team will be delighted to share their local contacts with you and help you book the following services:

- Local transportation
- Local restaurants
- Local guides
- Social activities & entertainment
- Photographers
- Printings

Please contact Elena Rubio at elena.rubio@ovationdmc.com.

## PARKING

A parking ticket can be can purchase for Fira Gran Via - Parking F via the Fira Stora: here. This parking ticket will be valid from the Tuesday 03 September 2024 to the Monday 09 September 2024 Once purchased, your parking ticket can be collected at the Customer Service Department within the Fira Barcelona.

If you don't need a parking spot every day, you can also go directly to the car park and pay for the hours that you stayed on your way out.
We recommand for ESCRS to park at Fira Gran Via - Parking F https://maps.app.goo.gl/fTaVTDmUnSW5Zfdk8

## SHUTTLE BUSES PICK UP / DROP OFF

Shuttle buses pick up/drop off at Fira Barcelona organised by sponsors are subject to approval by the venue.
Please send your request with the following information to escrs.sponex@mci-group.com before 5 July, 2024.

-Company Name

-Pick up/drop off dates and times

-Number of buses

-Size of the buses

# EXHIBITOR INFORMATION

## EXHIBITOR BADGE ALLOCATION

All delegates, exhibitors and sponsored sessions organizers will receive a personal badge to access the ESCRS2024 Congress. It is mandatory to wear your name badge at all times while inside the Congress Center. Delegates not wearing their name badge will not have access to the Halls.

You are entitled three (3) free exhibitor badges for you first 9 square meter exhibition space booked. You get one (1) additional badge for each additional full 9 square meter thereafter.

## ADDITIONAL EXHIBITOR BADGES

Additional badges can be ordered via the Congress Secretariat: escrs.reghot@mci-group.com.

### EXHIBITOR BADGES PICK UP

Badges can be picked-up at the registration area. The registration area is located in Hall 8 on the ground floor near the main entrance of the building.

## EXHIBITORS PARTICIPATION IN SESSIONS

Participants with Exhibitor badges will not be permitted to attend scientific sessions, except for their own company satellite symposia.
Exhibitors interested in attending a scientific session must register as regular congress participants by contacting escrs.reghot@mci-group.com.

# BUILD-UP AND DISMANTLING

## Rules & regulations

- 3 SEPTEMBER, 2024 will be used as an early build-up day and can only be booked in advance. This service is only available to exhibitors with stands of 80sqm or larger and there will be an additional charge. Early build-up needs to be booked via here.

- Early dismantling is expressly prohibited. All exhibits, displays, stand fittings, and materials must be removed from the premises by the time and date stated by the organisers. Removal of exhibits and dismantling may not commence until after the official closing time of the congress.

- Emergency aisles must be empty during build-up and breakdown at **all times** as officially confirmed by **the fire and safety department**. Obstructing the aisles will result in removing all materials. The emergency aisles are marked in blue on the floorplan.

- The companies that participate in build up and break down tasks must have an **Occupational Risk Prevention management system** (in accordance with the provisions of the Law on Occupational Risk Prevention 31/95, Art. 30). This section is included in ANNEX No. II of Occupational Risk Prevention.

## Contractor passes & access

Each individual staff member that requires access to the venue during official build-up and dismantling hours must present a build-up badge. Build-upo badges can be requested via this link.

Note:

- Access on 3 September, 2024 (early build-up day) will be granted only to stand builders working on behalf of companies that have booked early build-up.
- Contractor passes do not grant the bearers access to the congress centre outside of the official build-up and dismantling hours. Those contractors that require access to the exhibitor hall on congress days, from 08:00 to 09:00 to help with the booth setup, should go on-site to the exhibitors desk and ask for a wristband. **They can then access the venue with their contractor badge + wristband from 08:00-09:00.**

IMPORTANT - PPE

The use of safety shoes and hard hats are advises in all construction areas.

# CATERING

Exhibitors are not permitted to use external catering suppliers. A fine may be imposed if it is discovered that your items were not ordered through the official company. Selling any type of catering is prohibited and hard liquor is not allowed before 11:00am.
All booth catering must be ordered from GastroFira.

## BOOTH CATERING

> Please consult GastroFira Booth Catering brochure here.
> You can place your order via the Fira Store: here.
Deadline for orders is 20 August 2024.

## SATELLITE SYMPOSIA CATERING

>Please consult GastroFira Satellite Symposia Catering offer here.
>Send the order form on the last page to escrsgastrofira@firabarcelona.com before the 20 August 2024.

Exhibitors are permitted to bring their own barista to enhance their booth experience, with no additional costs incurred.

# CONFERENCE VIDEO COVERAGE

Media MICE is a Digital Media Partner of ESCRS and the preferred vendor for video coverage

### Conference Booth Coverage (CBC) Price: $9,800 USD.

Booth Footage/KOL Interviews/Market Update/Product Demo

- Production of two (2) videos plus distribution; includes:
- Primary Booth Video: One (1) video up to seven (7:00) minutes in length featuring your booth, KOL(s) and a brief market update or a brief product showcase.
- Highlight Video: One (1) highlight video of up to two (2:00) minutes in length.

### Booth Presentation Coverage (BPC). Price $12,500 USD.

Booth Activities, Presentation or Talk

Production of two (2) videos plus distribution; includes:

- Booth Presentation Video: One (1) Full Length Booth Talk Video with brief mini-interviews from presenters at conclusion
- Highlight Reel: One (1) Booth Talk Highlight video of up to two (2:00) minutes in length.

### Conference Symposium Coverage (CSC). Price: $15,000 USD.

Symposium Filming, Editing and Brief Interviews

Production of two (2) videos plus distribution; includes:

- Symposium Video: One (1) Full Length Symposium Video with brief mini-interviews from presenters at conclusion
- Highlight Reel: One (1) Symposium Highlight video of up to two (2:00) minutes in length.

### Dynamic KOL Interview (KOL). Price: $5,000 USD

One (1) KOL Interview video up to ten (10:00) minutes in length plus distribution.

### Custom Video Coverage or Package. Price: TBD.

Reach out to inquire for a custom built package to meet your objectives

Click here for the request form.

For any questions, please contact sales@mediamice.com.

# FREIGHT FORWARDING & ON-SITE HANDLING

GBH Exhibition Forwarding has been appointed as the sole forwarding agent and on-site handling contractor for the exhibition. It is the only company allowed to carry out lifting, off-loading and any means of on-site handling involving mechanical equipment, i.e. fork-lift trucks or cranes. All off or unloading from/to vehicles, deliveries to/from a stand or any other on-site handling will be charged and invoiced directly to the exhibitor (or stand contractor) by the sole forwarding agent.

The time frames, location and space near the exhibition halls are limited during build-up and dismantling. Therefore GBH will operate with timeslots for (un)loading complete vehicles. A timeslot will be provided after you made a booking with GBH. All vehicles arriving at the venue for the delivery and collection of exhibits or stand fittings must report to GBH. Click here to see the vehicle entrance procedure: link.

GBH is also responsible for all custom formalities for this event. For instructions please see their shipping manual, here.

## GBH Exhibition Forwarding

10 Orgreave Dr
Sheffield S13 9NR
United Kingdom
T. +44 114 269 0641
Email: escrs@gbhforwarding.com
W: www.ghbforwarding.com

## Self unloading costs

Has to be paid via the on-site ticket machine

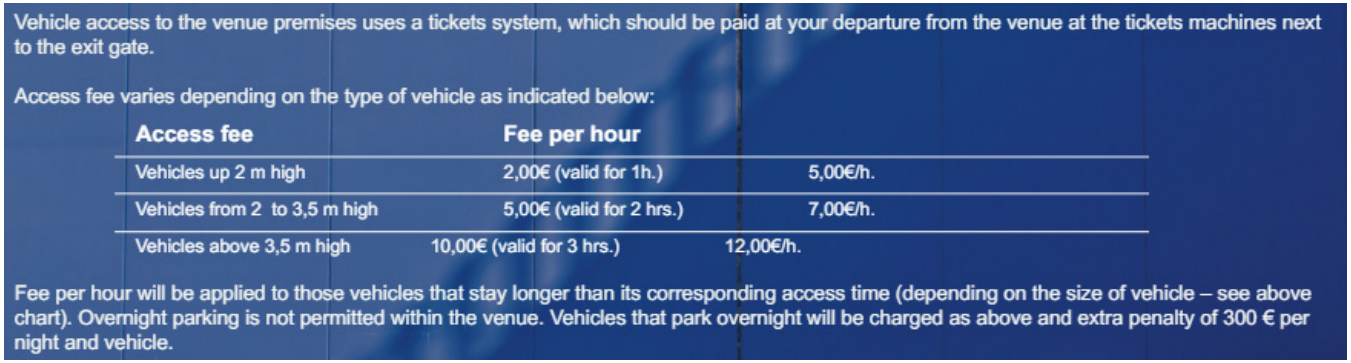

Vehicle access to the venue premises uses a tickets system, which should be paid at your departure from the venue at the tickets machines next to the exit gate.

Access fee varies depending on the type of vehicle as indicated below:

| Access fee | Fee per hour | |
|---|---|---|
| Vehicles up 2 m high | 2,00€ (valid for 1h.) | 5,00€/h. |
| Vehicles from 2 to 3,5 m high | 5,00€ (valid for 2 hrs.) | 7,00€/h. |
| Vehicles above 3,5 m high | 10,00€ (valid for 3 hrs.) | 12,00€/h. |

Fee per hour will be applied to those vehicles that stay longer than its corresponding access time (depending on the size of vehicle – see above chart). Overnight parking is not permitted within the venue. Vehicles that park overnight will be charged as above and extra penalty of 300 € per night and vehicle.

# HALL INFORMATION

1) The standard building height for the exhibition is 2.50m. Maximum construction height of the stands in the exhibition halls:

- 4 meter for walls.
- 7 meter for rigging (top of rigging).

2) The maximum floor load in the exhibition:

- Hall 6 is 5000 kg per m2
- Hall 7 is 3000 kg per m2

Any exhibit exceeding this limit will require special handling to distribute the load. Exhibitors are responsible for notifying EA Exhibitions of any potential weight concerns.

3) There are several utility channels in the hall. Electricity, internet and water will be connected to the closest, most beneficial channel (duct).

4) Both halls have pillars.

Hall 6

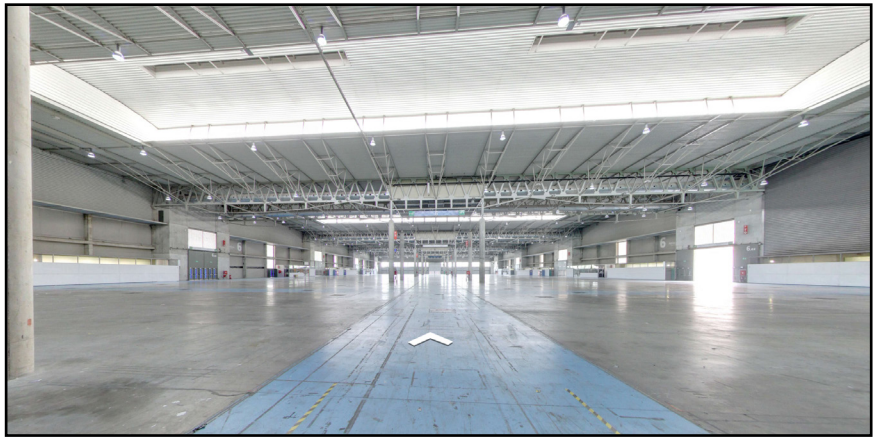

Hall 7



## MEETING ROOMS

There are a limited number of meeting rooms available for rent at the venue during ESCRS 2024, on a first-come-first-served basis.
You will find the meeting Rooms rental guidelines on the congress website and under the “Download” section of the ESCRS 2024 online booking platform (Toddoo).
All booking requests must be sent to escrs.sponex@mci-group.com. Please note that room rental is available for minimum 1 full day – no hourly or half day rental available.
For extra meeting rooms requests such as furniture, AV or green decoration, please contact: escrs@eaexhibitions.com.

## REGISTRATION DESK OPENING HOURS

| DAY | DATE | TIME |
|---|---|---|
| Thursday | 5 September 2024 | 09:00 - 18:00 |
| Friday | 6 September 2024 | 06:45 - 20:00 |
| Saturday | 7 September 2024 | 07:30 - 19:30 |
| Sunday | 8 September 2024 | 07:30 - 20:00 |
| Monday | 9 September 2024 | 07:30 - 19:30 |
| Tuesday | 10 September 2024 | 08:00 - 15:00 |

*Opening hours still subject to change

# EXHIBITOR SERVICES PROVIDED BY EA EXHIBITIONS

The following exhibitor services can be ordered in the web shop https://www.toddoo.com/event/escrs42

- Cleaning and Waste removal
- Electricity
- Floor covering
- Furniture
- Graphics
- Hostess & Security
- Internet & Wi-Fi
- Lighting
- Shell scheme packages, modular and custom stands
- Suspension Wires / Rigging

An exhibitors service desk operated by EA Exhibitions will be nearby the exhibition halls during the entire duration of build-up, dismantling and event.

## CLEANING AND WASTE DISPOSAL

The organisers will arrange daily cleaning of the aisles outside the exhibition open hours.

The exhibitor and/or stand contractor **is responsible for removing their own waste** during build-up and dismantling. It is **mandatory** to order waste containers (i.e. carpet/plastic/paper and mixed waste) in our web shop in case you will not be removing any waste yourself. Any material left behind in the stand or the hall after build-up and dismantling, will be directly charged to the exhibitor.

During build-up and dismantling the waste patrol service will monitor waste left in the aisles, with penalties applied upon detection.

# ELECTRICITY

Included in your exhibition booking:

- Shell scheme stands (via EA Exhibitions): A main connection and power socket is included (3.3kW)
  Note that there will be an electrical switchboard in each stand!
- Space only stands: **NO electricity included.**

IMPORTANT:

- Power will be distributed by the venue from the floor ducts.
- If the stand installation does not meet the set requirements, it cannot be connected to the power grid within the venue. These requirements must be complied before power can be supplied to your stand. Electrical (switching) panels must not be accessible to visitors. The installation of an RCCB (residual-current circuit breaker) for a nominal fault current of 0.03A is obligatory for the electrical infrastructure.
- **The service chest can either be accessible via a hatch or alternatively the venue is authorized to open the flooring to access the chest in case of an emergency. Please thoroughly read the Electricity FAQ.**
- In case of a raised floor, the electricity distribution point must be accessible.
- For safety reasons, connections to existing utilities may only performed by the venue or its authorised service partners.
- EU electricians who do not have the official Catalan electrician license are required to register themselves at any of its offices. Next, they must also register themselves with an ICO (Inspection and Control Organization).
- Non-EU electricians must make Fira de Barcelona directly responsible for the electrical distribution switchboard. If Fira de Barcelona is not made responsible for the electrical distribution switchboards, the stand constructor or exhibitor, if applicable, shall ensure that this service becomes the responsibility of an officially certified electrician in Catalonia or a European electrician who has prior experience in carrying out the aforementioned procedure.
- The electrical supply will be switched off one hour after the events closes on their final day for safety reasons. For safety and fire protection reasons it is necessary that all devices that consume electricity be switched off at the end of every event day when leaving the stand.
- All exhibitors who do not want to appoint the venue responsible for an electrical distribution switchboard of the stand must request approval via EA

**Grid form/electrical plan:** Indicate on the grid form your preferred location of your electricity connections. Include your stand orientation and exact measurements to each outlet.

Deadline to submit your grid form: 17 JULY, 2024

## HOSTESSES

We offer two types of hostesses for the exhibition stand, satellites and meeting rooms:

- Hostess: to assist with welcoming, reception, tidying, re-stocking materials, light hospitality, general on-site assistance.
- Engager: more proactive role who can assist with proactive engagement, lead generation, assist with stand activities/creating a buzz around the activities, help with surveys etc., and general on-site assistance.

Hostesses can be booked for several time slots, with a minimum booking of 4 hours.
Reminder that no hostesses are included in the cost of a satellite symposium and should be booked in addition if required

The quotation will include a stand badge for the hostess.

## STAND SECURITY

Although every reasonable security precaution is taken throughout the build-up, open period and dismantling, show management cannot be held responsible for any loss, damage or accident which may occur to any exhibitors (or their contractors) property or personnel.
We strongly recommend that any small or attractive items are kept under constant supervision and removed each evening and that suitable insurance cover is arranged for your stand.

You can order stand security to secure your valuable items - during build-up, show days and dismantling via the web shop.

## INTERNET AND WI-FI

A general Wi-Fi network will be available in all public areas during the entire duration of the event.

To ensure the highest capacity and accessibility for services (i.e. business applications), a fixed network connection is recommended.
According to the Wireless Policy established by the venue, exhibitors **are not allowed** to install or operate Wi-Fi networks, and all exhibitors are required to comply with it, whether they purchase IT services or not.
This Wireless policy includes: Installing wireless routers, MiFi, mobile hotspots or any other device that broadcasts a wireless signal, either in the 2.4GHz or 5GHz bands. Because such devices can interfere with the overall Wi-Fi service provided at the venue.

# STAND PACKAGES

## Basic shell scheme

Spaces are booked as raw space only. All stands must have at least partition walls and floor covering.
We offer various stand packages. You can order your stand package in the web shop.

**A basic shell scheme package can be ordered up to 24sqm.**

The package includes:

- Shell scheme construction
- Fascia with company name and stand number (max 20 characters)
- Sustainable carpet (anthracite)
- Spotlight (1 unit every 3 sqm)
- Electrical switchboard 3.3kW with 1 socket
- Initial and daily stand cleaning

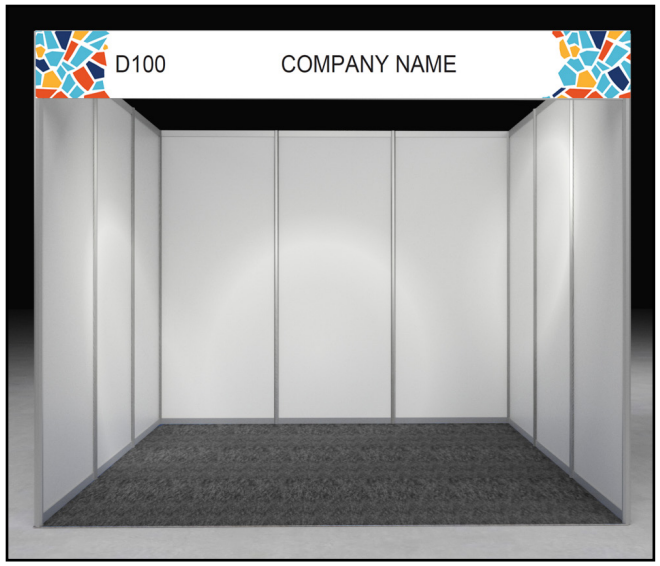


Additional items such as furniture, fascia logo's, plants and printed walls can be ordered in our web shop! We offer a wide variety of items and branding options that can enhance the look & feel of your standard stand package.

# STAND PACKAGES

Deluxe shell scheme

A deluxe shell scheme package includes:

- Shell scheme construction
- Fascia with company name and stand number (max 20 characters)
- Seamless graphics on all walls
- Sustainable carpet (anthracite)
- Spotlight (1 unit every 3sqm)
- Electrical switchboard 3.3kW with 1 socket
- Counter with your company logo
- Initial and daily stand cleaning

Price depends on stand type and size.
The deluxe shell scheme packages comes without any furniture. There are furniture packages available in the web shop.



# STAND PACKAGES

Premium stand

## Premium stand package

This is a system that allows a clean, quick and eco friendly setup! A modular system with great versatility that can be used for big scenography, signage, corporative brand structures with back lights, an design stands with complete graphic customisation (printed pvc, banner, perspex, dibond, wood, etc.)

Premium 1




Premium 2

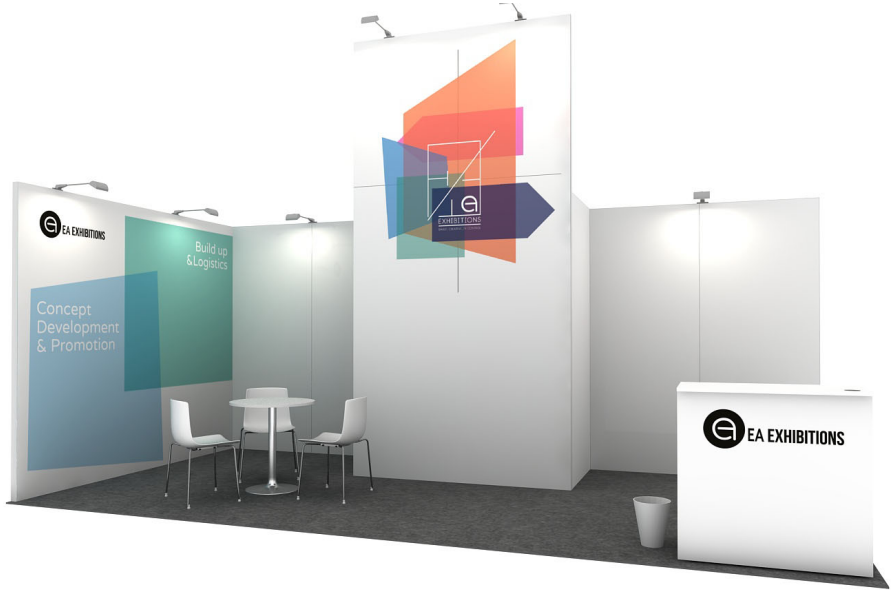

# STAND PACKAGES

## Premium stand

A premium package includes:

- Aluvision covered with printed banner(s)
- Storage room
- Sustainable carpet (colour of your own choice)
- Spotlights
- Electrical switchboard 3.3kW with 1 socket
- Furniture*
- Waste bin
- Initial and daily stand cleaning

*Surcharge applied when different furniture is requested.

Price depends on stand type and size.

Premium 3




Exhibitors with a stand package provided by EA Exhibitions have access to the exhibition to decorate the stand on:

- Thursday 5 September, 2024 08:00 - 22:00*
- Friday 6 September, 2024 08:00 - 11:00

*ALL EMPTIES MUST BE REMOVED FROM THE EXHIBITION BEFORE 20:00!

Kindly note that it is not allowed to deliver any items at your stand before this time.

# CUSTOMS STAND DESIGNS

Would you be interested in captivating the attention of all attendees at your exhibition stand? We can help you to transform your ideas into an unforgettable design!
Fill in the online form and find out what we can create for you. Together with our local supplier, we aim to design a personalised, beautiful and sustainable alternative for your company which will contribute to realise all your goals during ESCRS Barcelona. The size of the stand does not matter; from 9 sqm to large exhibits, we are more than happy to submit a proposal! Contact escrs@eaexhibitions.com for more information or a personalised quotation.





# RIGGING / SUSPENSION WIRES

## Rigging order requirements

EA Exhibitions is responsible for the safety of all hanging items, rigging and connections to the building structure. Therefore the establishment of all rigging points and wiring may only be performed by authorised staff of the venue and its official rigging partner.

The deadline to request rigging and/or submit your technical rigging plan is 10 JULY, 2024 CET. To request your rigging, please fill in this form.

In order to process the rigging orders we require a detailed sketch of your stand including the following (mandatory) data:

- The exact placement of each rigging point with measurements compared to the edges of the stand (e.g.: x: 750 cm y: 350 cm below).
- The exact height of each rigging point.
- The weight attached to each rigging point.
- The weight of the whole construction to be hung.
- CAD drawing of your rigging points with coordinates in dwg format, not PDF.
- Orientation of your stand indicating references such as location of aisles or neighbouring stands
- Weight per point marked in the CAD over each point.
- Static weight calculations signed by an engineer or someone that makes himself/herself responsible for what it will be suspended. (see next page)

## Regulations (see visual on page 30)

- Branding on hanging banners is only allowed on the open sides of the stand.
- It is important that the gap between the rigging/suspended banner, maximum height 7 meters and the walls/elements, minimum height 2,5 meters, is a minimum of 1 meter.
- Rigging must be placed 1 meter inside from your neighbours allocation.
- The minimum distance permitted between rigging points for hanging elements is 1 meter.
- The allowed maximum hanging weight of rigging elements is 15 kg/m2 calculated by the ratio between the total weight of the suspended elements and the contracted stand surface. See the calculation floor plan for your allocation here.
- It is not allowed to lift one truss grid with more than 6 manual chain hoists.
- Rigging points shall not bear a load exceeding 150 kg per point to ensure the structural stability of the ceiling [including truss, structure, safety steel, spotlights, banners, manual chain hoist (approx. 35 kg) or electrical chain hoist (approx. 50kg)]

There may be cases where columns or other infrastructure in the hall would require pre-rigging, or the request cannot be accommodated at all in your space. The venue reserves the right to make minor adjustments and/or do suggestions in order to enhance your rigging order.
Any relocation of installation etc. either on late notice or on-site will be invoiced directly to the exhibitor.

## Static Calculations:

Please allow a minimum of 4 business days for the completion of the static calculation.

We are able to provide you with a static calculation for an additional cost. In order to create the static calculation we will require the following information:

In this case, we request the following information:

- (1) Truss plan (DWG file or PDF with dimensions), Technical Truss sheet.
- (2) Lifting equipment (manual or electric chain hoist), and technical chain hoist sheet (weight in kilograms).
- (3) Lighting plan (DWG file or PDF with dimensions), number of lamps, and a technical sheet of every type of lamp (weight in kilograms).
- (4) Lineal meters of electric cabling, type of section cabling (weight in kilograms).
- (5) Sound plan (DWG file or PDF with dimensions), number of P.A. technical sheets of every type of sound element (weight in kilograms).
- (6) Number of elements (banners, screens, signs, ceilings, etc.), elements plans (DWG file or PDF with dimensions), type of hanging (punctual load or distributed load), weight for element (punctual weight or distributed weight), a material descriptive memorial of every type of element.

## Electricity:

Electricity, including electricity for rigging can be purchased through the webshop. The power supply at Fira Barcelona comes from the ground. If you require electrical cables please indicate:

- The type of electric cable: 3kw, 10kw, 22kw
- A plan showing where the cable goes and the electrical landing
- Electrical Motors: if you wish to hire electric motors, please indicate the initial working height at which you want the electric motors to be hung for the start of assembly and the working heights they will need during assembly and disassembly.

**Visual 1** Side View

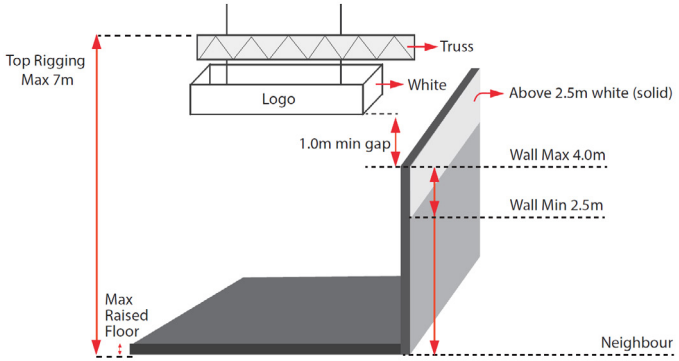


**Visual 2** Front View

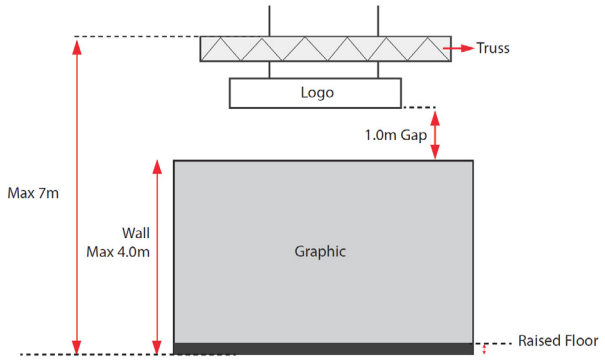


**Visual 3** Top View

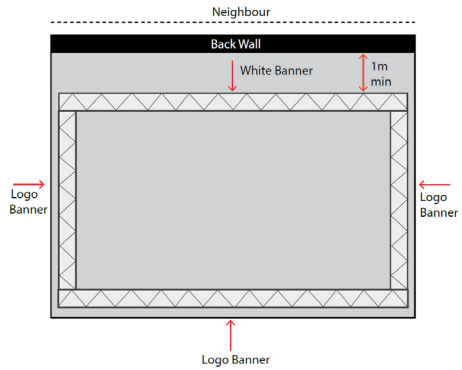


# WATER

The general supply points for water and drainage will be provided and connected by the venue. The connection will be connected to the nearest supply point of one of the utility channels in the floor. If your stand has a raised platform, the water pipe will be laid underneath. Please make sure that the connection can be easily accessed! Connections to exhibition hall water and drain lines shall be via 1/2-inch pipes in the case of water lines and 40-mm pipes in the case of drain lines.
Any additional activities or rentals on-site will be charged directly to the exhibitor.

# EXHIBITION REGULATIONS

## COMPANY NETWORKING EVENTS

Social networking is an important part of the congress itself. It creates the opportunity for participants to meet outside of the busy scientific programme of the congress. Such events should take place outside of the official programme hours and are subject to approval of ESCRS - please send any requests to escrs.sponex@mci-group.com.

Transportation to networking events must not depart until the end of the official programme hours. All organisational & financial matters pertaining to non-official ESCRS networking events are the responsibility of the participating company in charge of the networking event.

## INDUSTRY COMPANY MEETING & EVENTS

It is strictly forbidden to hold company meetings and company events outside the congress venue during the official congress programme times. Non-compliance may affect the companies' participation at future ESCRS meetings. Company meetings can be held at the congress venue subject to available meeting spaces and their capacities.

## GIVE-AWAYS AND PRINTED MATERIAL

Give aways and printed material may only be distributed in the space rented by the exhibitor in the exhibition hall, at their satellite symposia, in hospitality suites and/or meeting rooms rented by the exhibitor. No such material may be distributed in the rest of the congress center or any hotels used by ESCRS.
Companies may provide inexpensive educational items and/or gifts, in accordance with national laws, regulations and industry and professional codes of conduct of the country where the healthcare professional is licensed to practice. Contests, lotteries, raffles are subject to approval by ESCRS.

## INSURANCE REQUIREMENTS

All exhibitors are strongly encouraged to have Public/General Liability insurance adapted to the value of their stand and stand exhibited materials. All risks covered against damage and theft to the exhibitor's own property, and to property rented/leased by the exhibitor, shall also be arranged by each exhibitor.

No responsibility can be accepted by ESCRS/MCI Suisse SA/EA Exhibitions/Fira Barcelona for injury, loss of life, theft or damage to property.

Written proof of insurance policies will not be formally requested but is recommended to always have available during the congress.

## LEGAL ISSUES

Each participating company is responsible for the material and information they make available at the congress. Companies and their mandated organisations should only present material and information which has been approved by their legal departments and which is in compliance with the legislation of the host country of the congress. The organisers will not intervene or arbitrate in case of any legal issues.

## MEDICAL GASES / LASERS

Please be advised that the use of medical gases and lasers at our venue is subject to strict approval procedures to ensure the safety and compliance with regulatory standards. To facilitate this process, we require detailed information from all exhibitors planning to utilize these materials.

For medical gases:

- Type of Gas: Please specify the type of gas you intend to use.
- Storage Plan: Provide a detailed plan for how the gas will be stored. Spare bottle cannot be stred inside the exhibition space.
- Bottle Dimensions: Include the dimensions and capacity of the gas bottles.

For lasers:

- Type of laser
- Declaration of conformity and safety instructions
- Certificate/Manual: Submit a certificate or manual that includes detailed information about the laser equipment you will be using.

Please send the required information to us by email.

## NOISE / LIGHTS

Exhibitors may not produce noise and/or use amplification of music and/or voice which may be heard outside the space assigned to the exhibitors, or which may interfere with or be felt objectionable to attendees or other exhibitors. The volume level must not exceed 70dB (A) at the boundaries of the stand. The organisers reserve the right to require exhibitors to discontinue any such activity. Live presentations at the stand are not permitted without prior approval from the organisers.

Illumination on the booth must remain within stand space and can not interfere with vision of neighboring stands or on the aisles.

## PARTITION WALLS

Every exhibitor should take care of their own partition walls directly bordering to neighbouring stands. Partition walls that are visible from the back side and walls that are higher than 2.50m should be clean and finished in solid white. It is not permitted to use (shell scheme) walls from neighbouring stands for your own purposes.

## PHOTO AND FILM RECORDING

Taking videos and pictures of your stand and staff working during the event is permitted, however, please ensure that delegates and other exhibitors are not identifiable in your videos/photos unless you have explicitly asked for their consent.

Exhibitors are only permitted to take photographs of their own booth and displays. It is strictly forbidden to reproduce, draw, photograph or video products or displays owned by other Exhibitors without their prior written consent.

Use of video recording equipment within the venue is strictly forbidden unless written approval has been granted by the ESCRS Exhibition Department prior to the Congress. Please submit your request for validation to escrs.sponex@mci-group.com.

## PRODUCT SALES

Due to the event being a scientific congress with an accompanying exhibition, direct sales are not permitted on the exhibition floor. Attendees may place orders with exhibitors for products/services at the exhibitors' booth, but no financial transactions or delivery of products/services may occur during the event.

## PRODUCT DISPLAY

All products displayed during the exhibition should be approved under the European Medical Device Directives and should display the Certificate of Compliance CE (CE Certificate of Conformity) mark. Products which have not been assessed under these Directives, or are currently undergoing assessment, must be clearly identified as not being approved to display the CE mark.
Further information is available on the European Commission website: link. Failure to comply with these regulations will result in refusal of permission to exhibit.

PRODUCT DISCLAIMER
The acceptance of a product or service for exhibition does not in any manner constitute an endorsement by ESCRS.

## STAND ACTIVITIES

“Meet the Expert” sessions and stand activities such as product presentations and demonstrations, DryLabs, quizzes, contests, etc. can take place on rented exhibition space. These type of stand activities should be submitted for validation to escrs.sponex@mci-group.com.

Please ensure you have enough space on your rented exhibition space to host the participants as it is strictly forbidden for them to block the aisles or neighboring stands.

## SAFETY & FIRE REGULATIONS

Sprinkler systems, fire alarms, fire extinguishers, smoke detectors, mechanisms for closing exhibition hall doors and other pieces of safety equipment , including their signs or markings, shall be kept free from obstructions. Their operation must not be impaired and remain clearly visible and identifiable, and always remain fully functional.

- Escape routes shall always be kept clear.
- Emergency exits should not be obstructed, obscured, have anything hung over them, or otherwise be rendered unrecognisable.
- Aisles and walkways shall not be constricted by objects deposited herein or extending into them. All exhibits and furniture must remain within the allocated stand area. Items must not be placed in aisles.

All exhibitors as well as their personnel, are subject to the EMERGENCY ACTIVATION PLAN.

# STAND APPROVAL – SPACE ONLY

Space only stands contain raw space only.

Every space only stand design needs to be approved by EA Exhibitions before build-up. In order to approve your design, we need to receive:

- Technical drawings (floor plans, perspective views, sectioned views and top view), If you have a ceiling you must include the ceiling plan with dimensions of the closed ceiling area(s).
- 3D Visuals.
- EA Exhibitions retains exclusive authority to approve stand designs

Raw space stands with special structures (e.g. structures or exhibits >4 meter in height, closed ceilings, platforms higher than 20cm, etc.) must be approved EA Exhibitions and will need a structural analysis prior to the event, and are subject to additional costs (depending on the structure). A structural inspection will be performed during build-up, and costs can be charged when the structure is not according to the plan submitted.

Submission of your stand plan is possible until 3 JULY, 2024 CET. FORM to submit your design

## General

- We aim to encourage the most effective use of island spaces (4 open/aisle sides). This means maintaining visibility and transparency throughout the exhibition by ensuring that your stand design allows for unobstructed views from aisle to aisle, while also keeping open-sided stands as accessible to exhibition traffic as possible.
- It is not allowed to close off more than 1/3 of an open side (i.e. an open side of 3 meters may only be closed off with a wall of 1 meter maximum). This applies to each open side.
- Double decker stands are not allowed this year
- As a general rule, the free constructions must comply with the current regulations and, specifically, the Spanish Technical Building Code (TBC) in all of its sections, as well as the basic documents of structural safety (BD SS), fire safety (BD FS) and safe use and accessibility (BD SUA).
- Maximum construction height of the stands in the exhibition halls:
    - 4 meter for walls
    - 7 meter for rigging (top of rigging).
- All stands shall be entirely self-supporting. Nothing can be hanged from the roof or be attached to walls of the venue.
- The usage of products containing organic solvents are strictly forbidden, such as contact adhesives, spray paint, paint with white spirits or thinners with solvents.
- All stands must be designed and constructed as sustainable as possible (i.e. reusable materials).
- All stands with rigging structures must accomplish the rigging information detailed in this manual.

## FLOORING

- Floor covering is mandatory.
- Carpet can only be placed when using approved carpet tape. All tape must be removed at the end of the exhibition. Failure to do so will result in exhibitors being charged for its removal by the organisers.
- In case of a raised floor / platform, the stand contractor must confirm that the technical services are placed at the right location before setting up the platform. No complains will be accepted nor refunds are given in case the stand contractor does not check it prior to set-up. New services will not be accepted or installed when the platform is set-up.
- Installations must be accessible.

## TRANSPARENCY & VISIBILITY

- It is not allowed to close off more than 1/3 of an open side (i.e. an open side of 3 meters may only be closed off with a wall of 1 meter maximum). This applies to each open side.
- The design must be open and welcoming, and will not be approved if deemed to have a detrimental effect on neighbouring stands.

# WALLING ROW/CORNER/PENINSULA/ISLAND STAND

Stands with 3 open sides or less are obliged to erect a wall (minimum height 2.50m) between themselves and any direct bordering stand(s):

- A row stand requires walls on three sides (one back wall and two side walls)
- A corner stand requires walls on two sides (one back wall and one side wall)
- A peninsula stand requires only one wall (one back wall).
- An island stand does not require any walls (please check the regulations regarding closing off sides).

- It is not allowed to use walls from neighbouring stands for your own purposes.
- Exhibitors and/or stand contractors are responsible to leave any face of a partition wall higher than 2.50 meters in a clean, solid white finish (no graphics or logo's).

**Visual 1** Side View

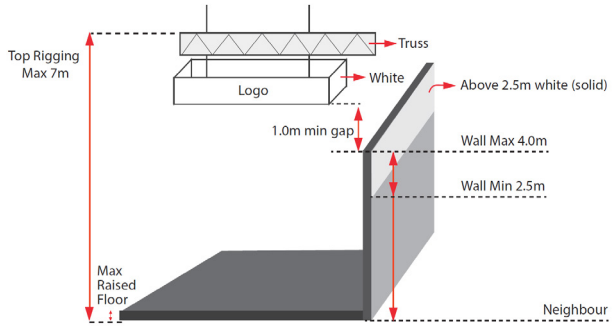


**Visual 2** Front View

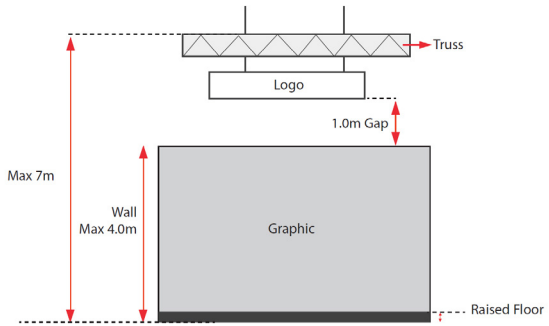


**Visual 4** Top view – what is not allowed?

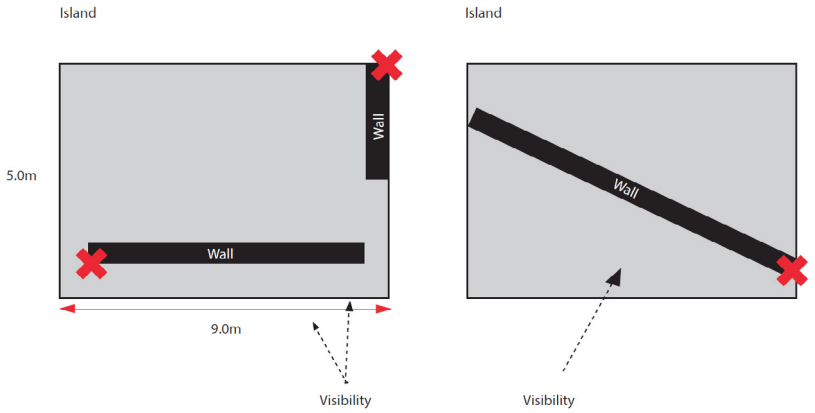


**Visual 5** Top view – 1/3 Rule – Wall Visibility

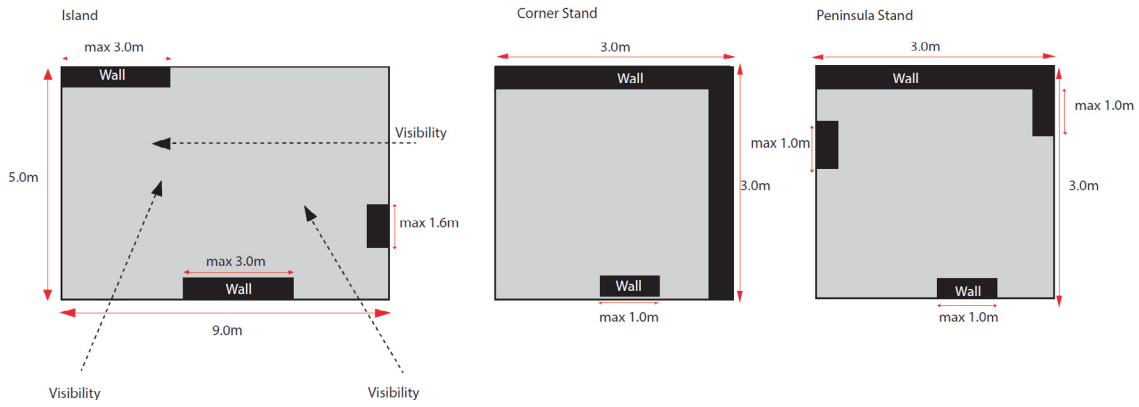

# GENERAL RULES & REGULATIONS

Please find the General Rules & Regulations of the venue under downloads in your dashboard.

Please find the General Rules and Regulations of EA Exhibitions in the exhibitor portal under downloads in your dashboard.